OPEN ACCESS

International
Journal
Of Modern Engineering Research (IJMER)

Heat Ventilation & Air- Conditioning System with Self-Tuning Fuzzy PI Controller

Mir Munawar Ali[1], Mohd Aamer Khan[2], Mohammed Shafi[3], Mohd Abdul Omer Khan[4], Md Azam Ali Farooky[5], Syed Azam[6], Syed Khasim[7], Shaik Wasei Eizaz Ahmed[8]

[1] Associate Professor, Department of Electrical and Electronics Engineering, Deccan College of Engineering & Technology, Hyderabad, INDIA
[2,3,4,5,6,7,8,] Student ,Department of Mechanical Engineering , Sreyas Institute of Engineering & Technology, Nizam Institute of Engineering & Technology, Hyderabad, INDIA

Abstract: *In this paper, a Self-tuning Fuzzy PI controller is used for the supply air pressure Control loop for Heating, Ventilation and Air-Conditioning (HVAC) system. The modern H. V. A. Cussing direct digital control methods have provided useful performance data from the building occupants. The self-tuning Fuzzy PI controller (STFPIC) adjusts the output scaling factor on-line by fuzzy rules in accordance to the current trend of the control process. This research work has got the integration and application of these fundamental sources of information, using some modern and novel techniques. In Comparison to PID and Adaptive Neuro-Fuzzy (ANF) Controllers, the simulation results show that STFPIC performances are better under normal conditions as well as extreme conditions where in the HVAC system encounters large variations. The cost and scalability of the setechniques can be positively influenced by the recent technological advancement in computing power, sensors and data bases.*

I. Introduction

Heating, Ventilation and Air-Conditioning (HVAC) systems require control of environmental variables such as pressure, temperature, humidity etc. In this system, the supply air pressure is regulated by the speed of a supply air fan. Increasing the fan speed will increase supply air pressure, and vice versa. In the large commercial buildings modern Direct Digital Control (D.D.C.) systems are becoming more favorable with the use of new sophisticated hardware. The H.V.A.C System components are used together and monitored remotely from a central location positions. The general trend in the design and commissioning of new commercial buildings includes the new types of these systems. It has been reported that fuzzy logic controller is very suitable for non-linear system and even with unknown structure. The tuning procedure can be a time-consuming, expensive and difficult task. This problem can be easily eliminated by using self-tuning scheme for fuzzy PI / PID controller. The conventional PID controllers are widely used in industry due to their simplicity in arithmetic, ease of using, good robustness, high reliability, stabilization and zero steady state error. But HVAC system is a non-linear and time variant system. It is difficult to achieve desired tracking control performance since tuning and self-adapting adjusting parameters on line are a scabrous problem of PID controller. In the first part of this paper Self-tuning Fuzzy Logic Controller is described. The second part described the implementation of the PI type Self-tuning Fuzzy Logic Controller on a HVAC system. In the last part simulation results are presented to compare with the well-tuned PID controller and Adaptive Neuro-Fuzzy (ANF) controller.

II. Development of pi-Type self-Tuning Fuzzy controller

The basic function of the rule base is to represent in a structured way the control policy of an experienced process operator and/or control engineer in the form of a set of production rules such as: If{process state}then{control output} Considered a set of desired input-output data pairs:

$$[X_1^{(1),} X2^{(1)}; U^{(1)}], [X_1^{(2),} X2^{(2)}; U^{(2)}] \qquad \ldots\ldots\ldots\ (1)$$

Where X_1 and X_2 are inputs and u is the output.
Here considered error(e)as$X_1$and change of error(Δe)asX_2.

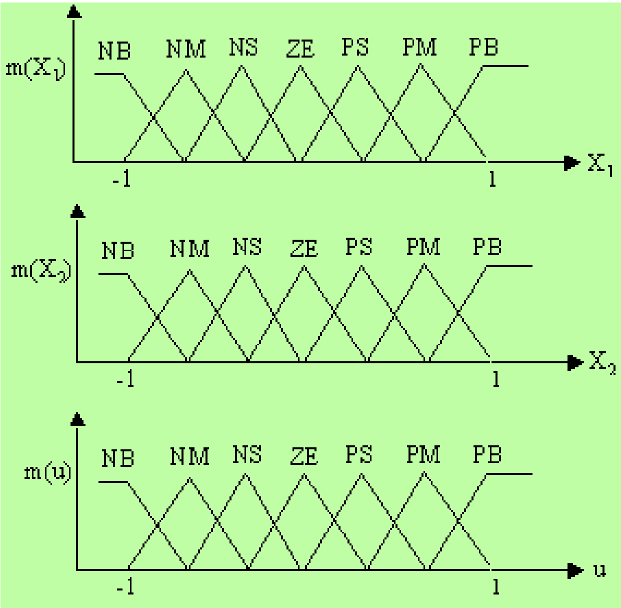

Fig. 1: Membership function of inputs X_1, X_2, and output u

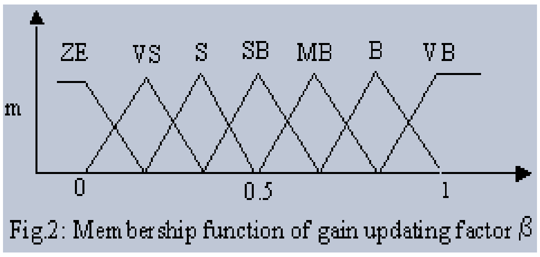

Fig.2: Membership function of gain updating factor β

The task here is to generate as set of fuzzy rules from the desired input-output pairs of equation(1)through following steps[20]:

Divide the input and output spaces into fuzzy regions.

Assumed the domain interval so fx1,x2 and u are $[x_1^{-}, x_1^{+}]$, $[x_2^{-}, x_2^{+}]$and$[u^{-}, u^{+}]$respectively.

Fig.1 shows each domain interval divided into 7 equal regions, denoted by NB (negative big), NM (negative medium), NS (negative small), ZE (zero), PS (positive small), PM (positive medium) and PB (positive big) and assigns each region a fuzzy membership function. The shape of each membership function is triangular.

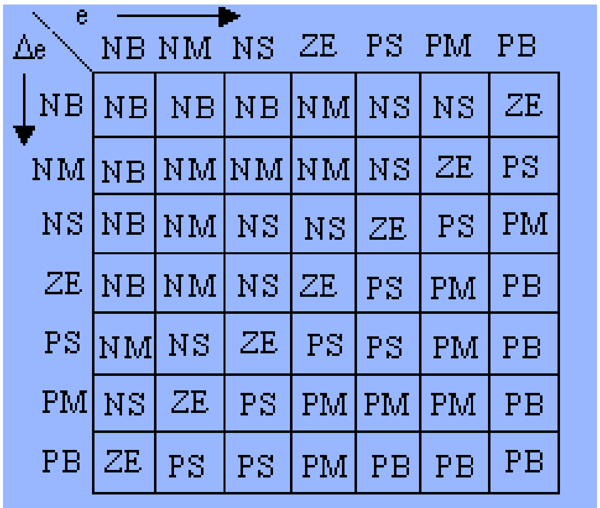

Δe \ e	NB	NM	NS	ZE	PS	PM	PB
NB	NB	NB	NB	NM	NS	NS	ZE
NM	NB	NM	NM	NM	NS	ZE	PS
NS	NB	NM	NS	NS	ZE	PS	PM
ZE	NB	NM	NS	ZE	PS	PM	PB
PS	NM	NS	ZE	PS	PS	PM	PB
PM	NS	ZE	PS	PM	PM	PM	PB
PB	ZE	PS	PS	PM	PB	PB	PB

Table 1: Fuzzy rules for computation of u

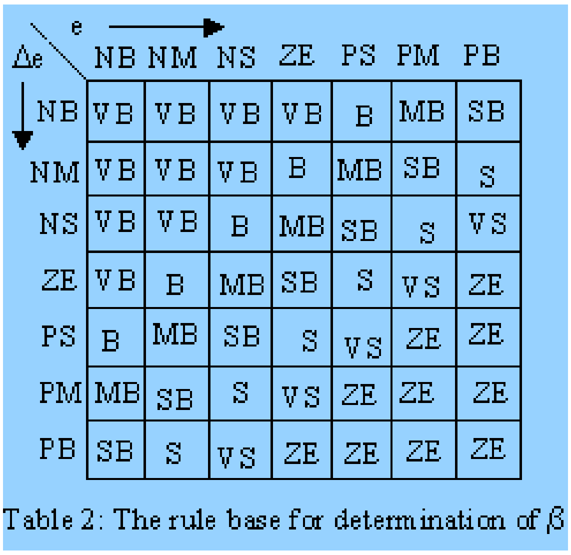

Δe \ e	NB	NM	NS	ZE	PS	PM	PB
NB	VB	VB	VB	VB	B	MB	SB
NM	VB	VB	VB	B	MB	SB	S
NS	VB	VB	B	MB	SB	S	VS
ZE	VB	B	MB	SB	S	VS	ZE
PS	B	MB	SB	S	VS	ZE	ZE
PM	MB	SB	S	VS	ZE	ZE	ZE
PB	SB	S	VS	ZE	ZE	ZE	ZE

Table 2: The rule base for determination of β

The term set so fe, Δe and u contains the same linguistic expressions for the magnitude part of the linguistic values ,i.e.,

LE =LΔE=LU={NB,NM,NS,ZE,PS,PM,PB}

AsshowninFig.1andrepresents the rule base in the table formatasshowninTable1.Thecelldefinedbytheintersection ofthefirstrowandthefirstcolumnrepresentsarulesuchas,Ife(k)isNMandΔe(k)isPSthenu(k)isNS. The fuzzy controller is developedusingthis49fuzzyif-then rulesasshowninTable1.

Similar like fuzzy controller, using symmetrical triangle calculate membership functions of (i)e, Δe, u(as shown in Fig.1) and (ii)gain updating factor(β) (as shown in Fig.2)for self-tuning mechanism. An addition al logic for addition at the output of controller is incorporated for PI controller. Because the discrete-time version equation of PI controller is

$$\Delta u(k)=K_p \Delta e(k)+ K_I e(k);$$

$$\Delta u(k)=u(k)-u(k-1);$$

or

$$u(k) = \Delta u(k)+u(k-1),$$

Where $\Delta u(k)$ is the change of control output and $u(k)$ is the total control output. Fig.3showsthattheoutputscaling-factor (SF) of the fuzzy controller is modified by a self-tuning mechanism, which is marked by bold rectangular portion in the figure. Then based on the knowledge of process control or by trial and error method choose suitable SF's for inputs and output. The relationship as follows for PI type self-tuning fuzzy controller scheme.

$$e_N=N_e e,\ \Delta e_N=N_{\Delta e}\Delta e \text{ and } \Delta u=(\beta N_u)\Delta u_N$$

Where N_e and $N_{\Delta e}$ are input scaling factor of error and change of error respectively and N_u is output scaling factor. There after apart from fuzzy PI controller rule determination, also determines the rule base for gain updating factor, in the similar way like, Ife is E and Δe is Δ E then β is β.

A structure of which is shown in Table2, though it may vary. Further modification of the rule base for β may be required, depending on the type of response the control system designer wishes to achieve. AsshowninFig.3, when this β is multiplied with the fuzzy controller gain N_u, gives the overall gain of STFPIC. It is very important to note that the rule base for computation of β will always be dependent on the choice of the rule base for the controller.

Choice of Scaling Factor (gain): The scaling factors also known as gains, which describe the particular input normalization and output demoralizations, plays an important role similar to that of the gain coefficients in a conventional controller.

For example, a fuzzy controller can be represented as

$$N_u * u(k) = F(N_e * e(k), N_{\Delta e} * \Delta e(k)),$$

Where N_e, $N_{\Delta e}$ and N_u are the scaling factors fore, Δ e and u respectively, and Fisanon linear function representing the fuzzy controller. Same gain principle is used in the design of self-tuning fuzzy controller.

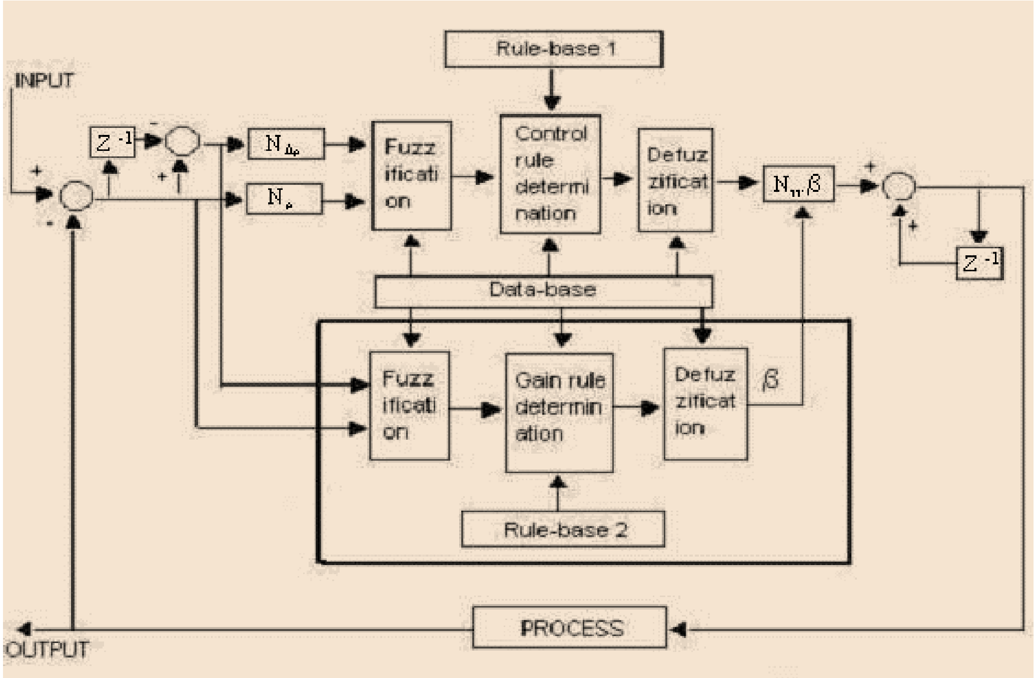

Fig.3: Block Diagram of the PI type STFC

III. Simulation results

A typical cooling only HVAC system is shown in Fig.8.In the system, the outside air is mixed with the building return air. Then the mixed air (supply air) is sucked through the cooling coil via a filter by as apply air fan. The cooled air is then supplied to different zones as shown in the figure. In this HVAC system, the supply air pressure is regulated by the speed of a supply air fan. Increasing the fan speed will increase the supply air pressure, and vice versa. The dynamics of the control signal feeding to the fan Variable Speed Drive to the supply air pressure can be modeledasa second order plus dead time plant.

A. Performance Analysis of the STFPIC

Study as well as analysis is made if the performance of STFPIC is applied under normal condition and changing of HVAC process model.
Under Normal Condition: The transfer function of the supply
Air pressure loop under normal condition is obtained as

$$G(s) = 0.81e^{-2s} / (0.97s+1)(0.1s+1)$$

Where gain(K)=0.81,τ_1=0.97,τ_2 =0.1anddeadtime(δ) =2sec.
For this process scaling factors are set at N_e =0.9,$N_{\Delta e}$=5andN_u =2.5.

Under HVAC Process Parameters Variation:

1) When gain(K)=0.81,τ_1=0.2,τ_2=2anddeadtime(δ)=2sec.,thenthetransferfunctionofthesupplyairpressureloopisobtainedas

$$G(s) = 0.81e^{-2s} / (0.2s+1)(2s+1).$$

For this process scaling factors are set at N_e =0.9,$N_{\Delta e}$=15andN_u =0.3.

2) When gain(K)=1.2,τ_1=0.97,τ_2 =0.1anddeadtime (δ)=3sec.,thenthetransfer function of the supply air pressure loop is obtained as

$$G(s) = 1.2e^{-3s} / (0.97s+1)\ (0.1s+1).$$

For this process scaling factors are set at N_e=0.9,$N_{\Delta e}$=3 and N_u=1.
3) When gain(K)=1.2,τ_1=0.97,τ_2 =0.1anddeadtime (δ)=4sec.,thenthetransfer function of the supply air pressure loop is obtained as

$$G(s) = 1.2e^{-4s} / (0.97s+1)(0.1s+1).$$

For this process scaling factors are set at N_e =0.9,$N_{\Delta e}$=3andN_u =1.

TheFig.4, Fig.5, Fig.6, Fig.7 and Table3 are shown that the supply air pressure loop of HVAC works satisfactorily both under normal and as well as under model variations. Table3 refers that both the rise time and settling time is very much satisfactory. Peak over shoots are also shown negligible when STFPIC is used.

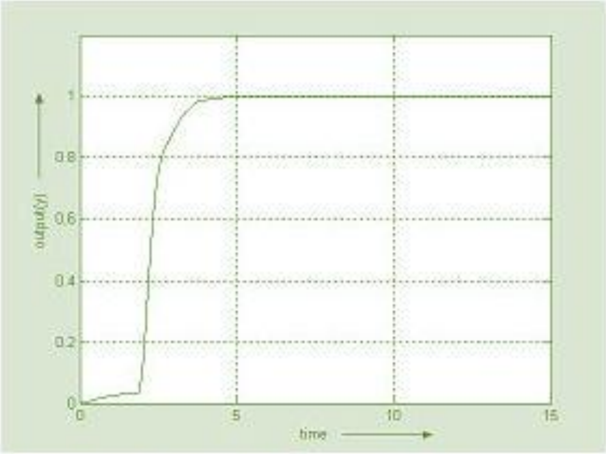

Fig.4: Performance of the transfer function

$$\frac{0.81\,e^{-2s}}{(0.97s+1)(0.1s+1)}$$

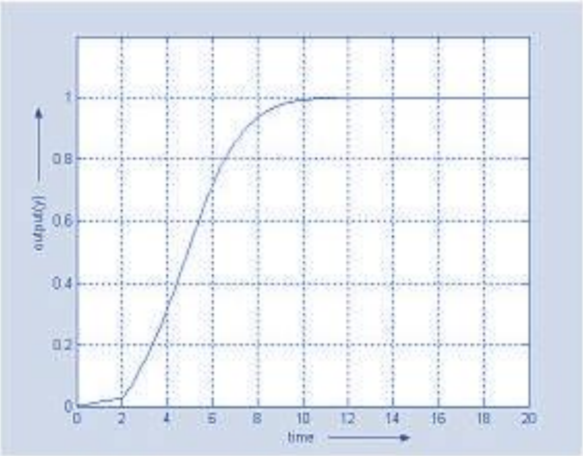

Fig.5: Performance of the transfer function

$$\frac{0.81\,e^{-2s}}{(0.2s+1)(2s+1)}$$

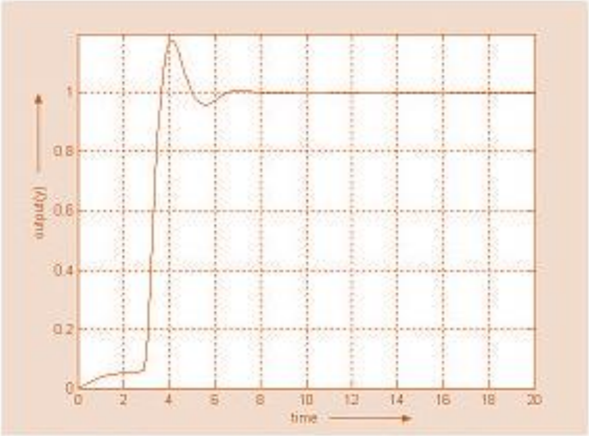

Fig.6: Performance of the transfer function

$$\frac{1.2\,e^{3s}}{(0.97s+1)(0.1s+1)}$$

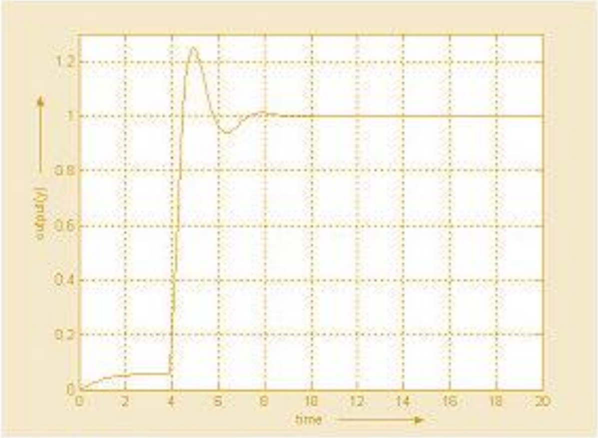

Fig.7: Performance of the transfer function

$$\frac{1.2\,e^{4s}}{(0.97s+1)(0.1s+1)}$$

B. Comparison of Practical Performance with Existing Methods.

In order to demonstrate the effectiveness and robustness, the performance of the proposed STFPI Chas been compared with those of existing methods, the Bi, Cai’s PID controller and Jian, Cai’s ANF controller[22] for supply air pressure loop control. The comparison has been done under changing process model. The results are provided in Table4. For the application of STFPIC, substantial improvements have been observed in settling time and also in peak over shoot for all the transfer function of the air supply model compare to ANF and PID controller. Furthermore, it is more important that when the process encounters large parameter variations, the method providedpresentsmuchrobustnessasshowninTable4.

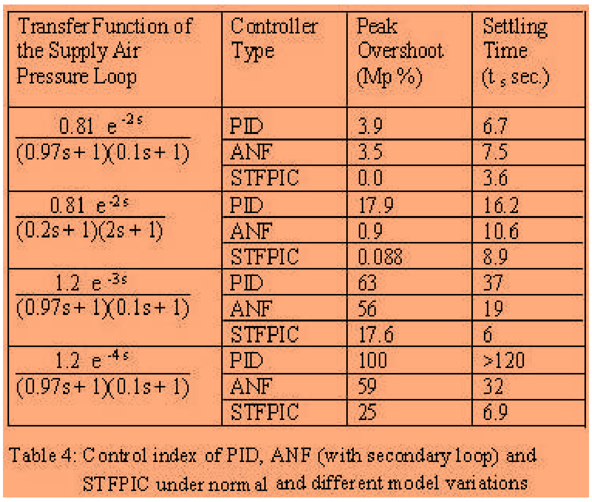

Transfer Function of the Supply Air Pressure Loop	Controller Type	Peak Overshoot (Mp %)	Settling Time (t_s sec.)
$\frac{0.81\ e^{-2s}}{(0.97s+1)(0.1s+1)}$	PID	3.9	6.7
	ANF	3.5	7.5
	STFPIC	0.0	3.6
$\frac{0.81\ e^{-2s}}{(0.2s+1)(2s+1)}$	PID	17.9	16.2
	ANF	0.9	10.6
	STFPIC	0.088	8.9
$\frac{1.2\ e^{-3s}}{(0.97s+1)(0.1s+1)}$	PID	63	37
	ANF	56	19
	STFPIC	17.6	6
$\frac{1.2\ e^{-4s}}{(0.97s+1)(0.1s+1)}$	PID	100	>120
	ANF	59	32
	STFPIC	25	6.9

Table 4: Control index of PID, ANF (with secondary loop) and STFPIC under normal and different model variations

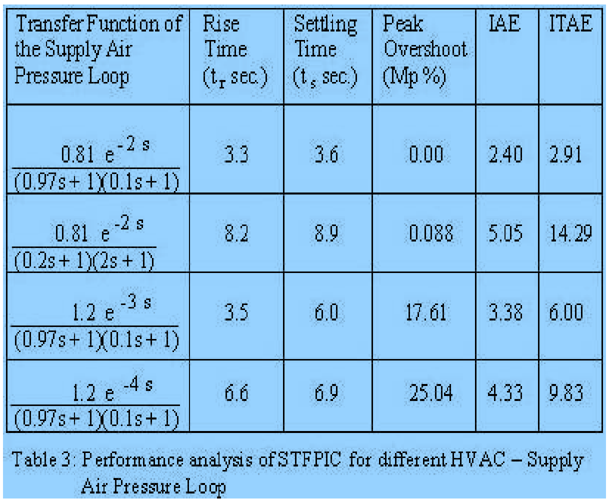

Transfer Function of the Supply Air Pressure Loop	Rise Time (t_r sec.)	Settling Time (t_s sec.)	Peak Overshoot (Mp %)	IAE	ITAE
$\frac{0.81\ e^{-2s}}{(0.97s+1)(0.1s+1)}$	3.3	3.6	0.00	2.40	2.91
$\frac{0.81\ e^{-2s}}{(0.2s+1)(2s+1)}$	8.2	8.9	0.088	5.05	14.29
$\frac{1.2\ e^{-3s}}{(0.97s+1)(0.1s+1)}$	3.5	6.0	17.61	3.38	6.00
$\frac{1.2\ e^{-4s}}{(0.97s+1)(0.1s+1)}$	6.6	6.9	25.04	4.33	9.83

Table 3: Performance analysis of STFPIC for different HVAC – Supply Air Pressure Loop

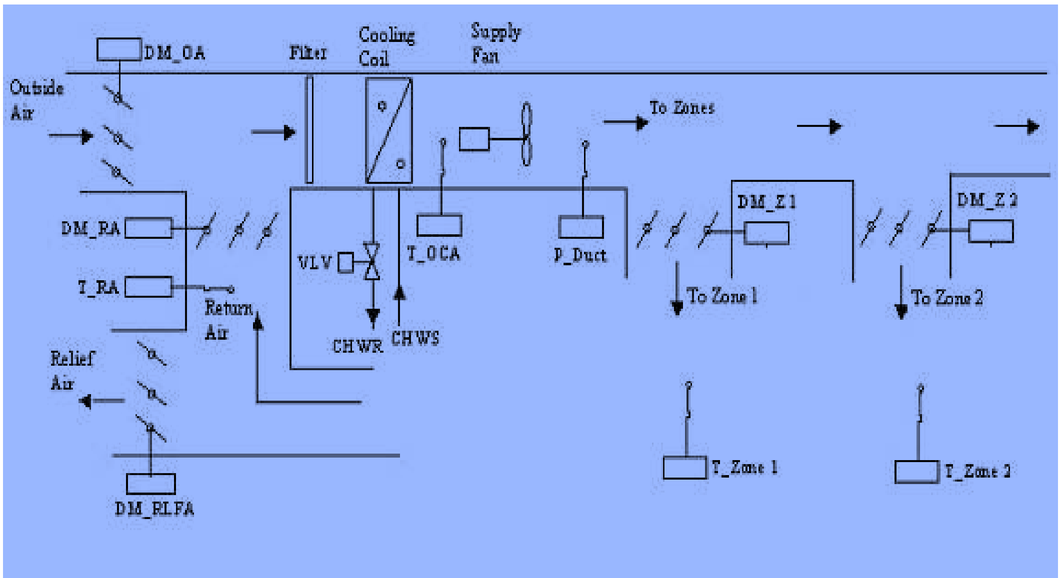

Fig. 8 : A typical HVAC system

IV. Application of Fuzzy Control for Optimal Operation of Complex Chilling Systems

4.1 Requirements for the design of the fuzzy control system

The fuzzy control system is needed to ensure supply of the required cooling power during the operating time of the building by the lowest cost and the shortest system operating time with a low range of set point error for the supply temperature. The concept of knowledge engineering by measurement and analysis of system behavior is necessary, since no expert knowledge has existed for the formulation of the fuzzy rules. Measurement of two physical values of the system is necessary, in order to consider system behavior. These process values are: the outdoor air temperature Tout, which partially presents the thermal behavior of the building, and the user net return temperature (Tr-un), which contains the total cooling load alternation of the building. These requirements focus on three different fuzzy controllers for the different components of the chilling system. The design data for fuzzy controllers has been organized in various tables for the assistance of membership function values of various input variables to a mamdani type fuzzy inference system (FIS).

Table 5: FUZZY CONTROLLER'S TEMPERATURE DISTRIBUTION DESIGN DATA.

SUPPLY TEMPERATURE (HE_1) °C	SUPPLY TEMPERATURE (HE_2) °C	EXTERNAL TEMPERATURE T_{out} (K) °C
4.2	31.1	29.7
5.8	31.2	30.1
6.3	31.5	33
6.9	31.9	34
7.3	33.2	35
8.2	33.4	37
13	33.5	39
14	34.5	42
15	35.4	54

Here, HE2 and HE1 are the respective heat exchangers for evaporator and condenser and Tout is the outdoor air temperature. The fuzzy controller's set point error difference design data is as shown in table 4.3.Hereerror (e1) and error (e2) gives the difference between the SP (set point value) &MV (measured value) for condenser and evaporator. Tr-un gives the user net return temperature due to individual zone and internal load (occupants, equipment, computers etc). Tr-un gives the difference between user net return temperature and set point temperature. Tout gives the difference between user net return temperature and outdoor air temperature and d Tout/ dt gives the difference between outdoor air temperature by K^{th}cycle and $K\text{-}1^{TH}$cycle. The assessment of refrigeration is made from the coefficient of performance (COP).It depends upon evaporator temperature Te and condensing temperature Tc.

$$\text{COP Carnot}=\frac{Te}{(Tc-Te)}$$

COP in industry calculated for type of compressor:

$$\text{COP}=\frac{\text{Cooling Effect (kW)}}{\text{Power input to compressor (kW)}}$$

4.2Thermal analysis of the building and chilling system

The aim of the thermal analysis of the building is to find measure able information for the needed current cooling load. Alternation for internal cooling load of computers and machines could not be exactly registered or measured. It has been proven by measurement of current cooling power of the building as shown in fig.2thatthereisnota significant correlation between T out and the current cooling power. Also, at higher internal load, there is a heat transmission to the outdoor air space, if Tout is lower than33°C.The current cooling power will increase, if Tout gets higher than 33°C. Al though the equipment and computers are on service for 24 hours a day, there is a big alternation of cooling power. In the summertime, when the Tout increasestoabout45°C,the current cooling power will be more influenced by Tout. So Tout can be used for fore casting the maximum cooling power. Additional information is necessary, in order to analyze the thermal behavior of the building. This information is gained by measuring the user net return temperature(Tr-un). Any change of total cooling load will influence Tr-un and is an important input for the fuzzy controller.

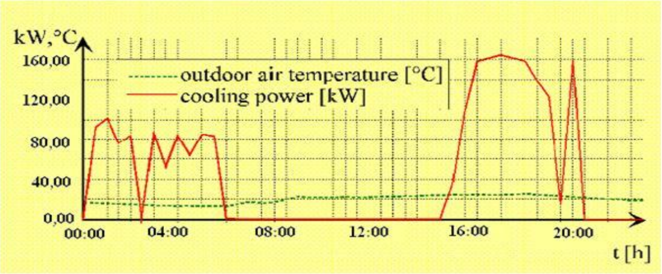

Fig.9: Alternation of current cooling power and outdoor air temperature.

4.3 Description of the Chilling System

The chilling system described here supplies chill water to the air conditioning systems (AC-systems) installed in basement at Ansal Highway Plaza, Jalandhar (Punjab), Indiaasshowninfig.1.There search conditions are ensured by the AC systems by supplying conditioned air to the building. The amount of cooling power for the building is the sum of internal cooling load (produced by occupants, equipment and computers) and the external cooling load, which depends on outdoor air temperature (Tout) and sun radiation through the windows. The compression cooling method is made use of by the cooling machines installed here.

The principle of a compression cooling machine can be described in two thermodynamically processes. In the first step of the cooling process, the heat energy will be transferred from the system to the heat exchanger (evaporator) of the cooling machine, and therefore the liquid gas will evaporate by absorbing the heating energy. After the compression of the heated gas, in the second part of the process, the gas condenses again by cooling the gas through the air cooling system. In that step of the process, the heat transfer is from the condensation system to the outdoor air space. The process is continuous, and based on the second law of the thermodynamics. The vap our compression chiller system consists of following components.

(a)Compressor: It acts as are claiming agent.

(b)Condenser and Evaporator: These acts as a heat exchangers.

(c)Expansion Device: It acts as a throttling device to expand the liquid refrigerant.

(d)Refrigerant: It acts as a working fluid which absorbs heat from the fluid to be cooled and rejects heat to the atmosphere, through evaporation and condensation.

The schematicofavapour compression chiller system is as showninfig.10.

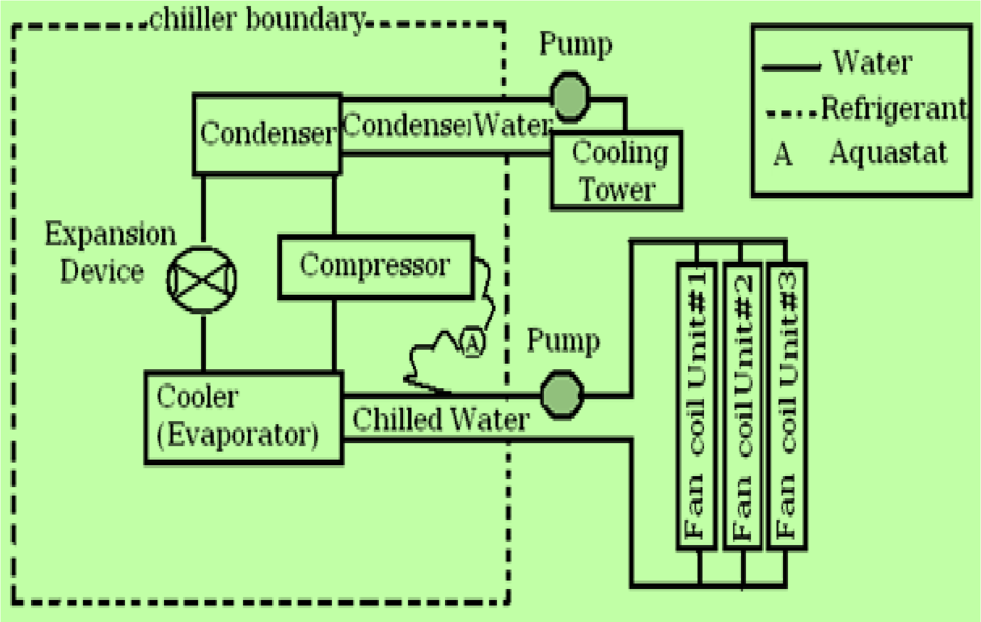

Fig.10: Schematic of a water-cooled chiller system.

During the operation of the cooling machines, the air cooling systems will be used and the condensation energy of the cooling machine is transferred to the outdoor air space. If the outdoor air temperature is much lower than user net return temperature on heat exchanger one, the air cooling system should serve as a free cooling system and replace the cooling machine.

4.4 Fuzzy controller1 for operation of the cooling load storage system.

The optimum start point for the discharge of the cooling load storage system depends on the maximum cooling power needed, which can differ every day. For calculation of maximum cooling power, Tout must be processed by the fuzzy controller, since the maximum cooling power in the summer time will be influenced extremely by Tout. A feed back of current cooling power calculated by Fuzzy control Block2 is also necessary, in order to estimate the maximum cooling power. If the peak of a maximum cooling power is estimated by the fuzzy controller, then this will be compensated by optimally discharging the cooling load storage system parallel to the cooling machines.

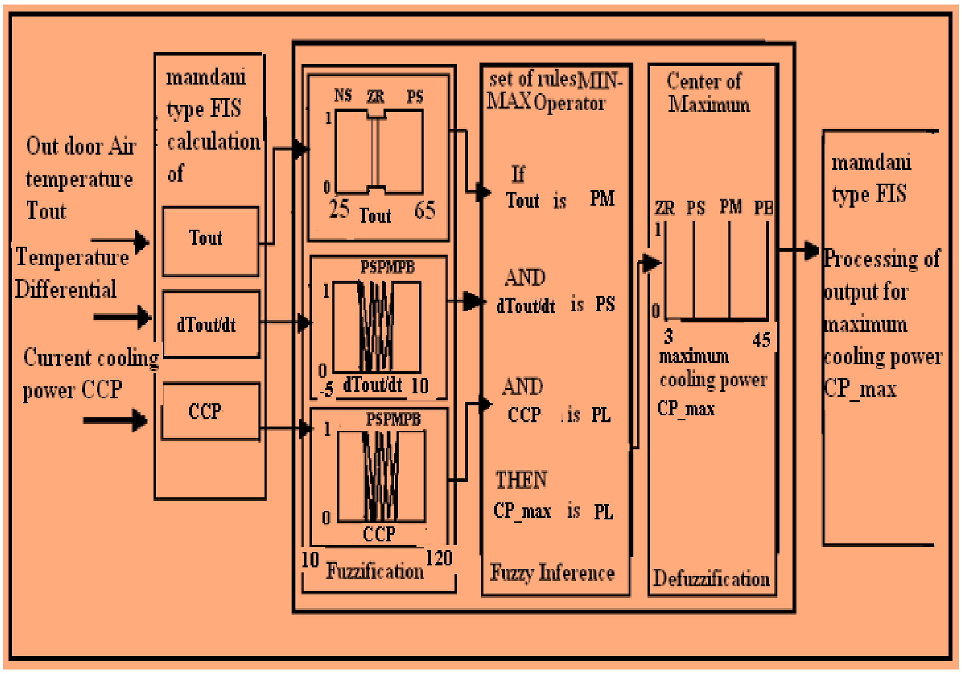

Fig.11:Fuzzycontroller1foroptimallydischargingcooling load storage system.

Theinputvariablesofthecontroller1are:
(1)Outdoor air temperature Tout
(2)Differential of T out
(3) Current cooling power of the cooling machines.

For the fuzzification of the Tout, we have following system knowledge. Observation of the system has shown that above Toutof45°C, a second cooling machine is necessary, in order to meet demand for increasing cooling load. There fore the fuzzification will be around Tout45° C with only three fuzzy sets.
The second fuzzy variable is calculated by eqn(4.1)

$$D\ Tout/dt=(Tout(k)-Tout(k-1)) \qquad (4.1)$$

With Tout(k)=outdoor air temperature by K^{th} cycle
Tout(k-1)=outdoor air temperature by$K{-}1^{TH}$ cycle.

The third input variable is the output K value1^{TH}ofthe Fuzzy controller2, and represents the current cooling power. The output of the fuzzy controller1 is the estimated maximum cooling power CP-max. The membership function used for the fuzzy variables are available as P, Z, trapmf, trimf andS- functions. For the defuzzification,"Centre of maximum "has been supported by the Mamdani type FIS (Fuzzy Inference System) Fig.4shows the P membership function as calculated byequation4.2

$$X=MAX\{0, MIN[1,B/(B-C) - AB(1/(B-C)\ (K-A))]\} \qquad (4.2)$$

With^{o} =degree of membership
X=process variable as input variable
A,B and C=parameters for the membership functions in value of the input variable, e.g.°C

Membership function P type :

Therule viewerforfuzzycontroller1isasshowninFig.12

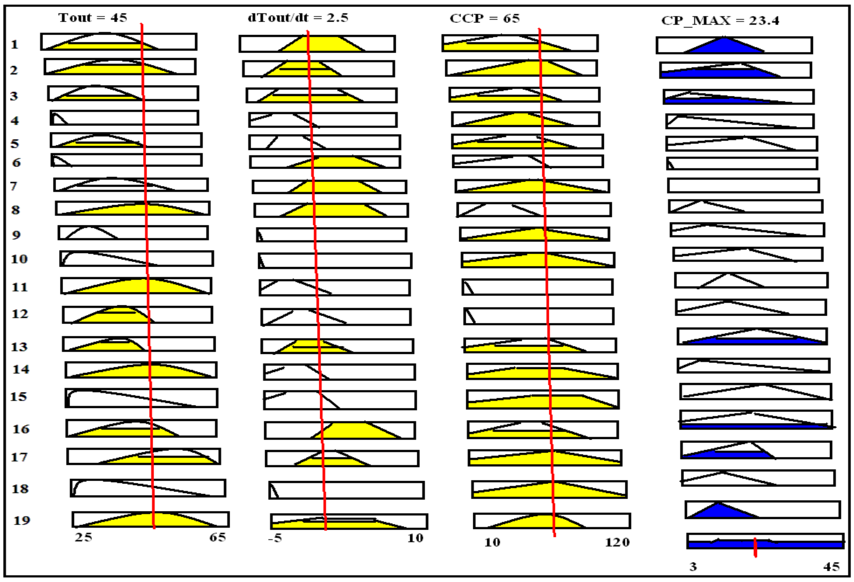

Fig.12: Rule viewer for fuzzy controller

4.5Fuzzycontroller2 for the operation of the cooling machines

The fuzzy controller 2(FC-2) is the important part of the optimization control system, so that the cooling potential of the outdoor air is used, before starting any cooling machine. If"e1" is zero, or negative, then the capacity of free cooling system is enough for the required cooling power. The output signal of FC-2willbezero.Inothercases,FC-2isresponsible for the operationofthecoolingmachines.Thiscontrollerconsistsof3 input variables as following:

(1)Setpointerror"e1"atheatexchanger1
(2)Setpointerror"e2"atheatexchanger2
(3)Difference between user net return temperature (Tr-un) and T set point.

The input variable1, is calculated as the difference between user net set point temperature (Tset point), and output temperature of the heat exchanger (THE1) according toequation4.3.

$$e1=T_{set\ point}-T_{HE1} \qquad (4.3)$$

For this variable, only three sets are necessary, in order to defineif,e1is NS,ZRorPS.Therangeofe1isbetween+1k and-1k.Thesecondinputvariable is calculated as the difference between(T set point), and output temperature of heatexchanger2(THE2) according toequation4.4

$$e2=T_{set\ point}-T_{HE2} \qquad (4.4)$$

The third input variable is determined by equation 3.5

$$Tr\text{-}un=Tr\text{-}un-T_{set\ point} \qquad (4.5)$$

Calculation of Tr-un is necessary, because $T_{set\ point}$ is variable, and therefore Tr-un contains the real information about the cooling load of the building.

As soon as the first variable of the controller "e1" reaches the values of PS or ZR, this indicates that the capacity of FC-system is enough to cover the demanded cooling power, and the output signal for cooling machines is zero. In cases, where the capacity of the free cooling system is not enough, "e" will have values of NS, so that output of the controller will be determined by other rules. In that case the third input variable Tr-un is more weighted for the output value of the controller, because Tr- un represents the real alternation of the cooling load of the building. As shown in fig.5, the mamdani type fuzzy inference system (FIS) consists of calculation of input variables such as supply temperature HE1 set point error e1,supply temperature HE2 set point error e2 and user net return temperature Tr- un, then through the process of fuzzification, fuzzy inference and defuzzification. The processing of output for current cooling power (CCP) takes place takes place in mamdani type fuzzy inference system (FIS).

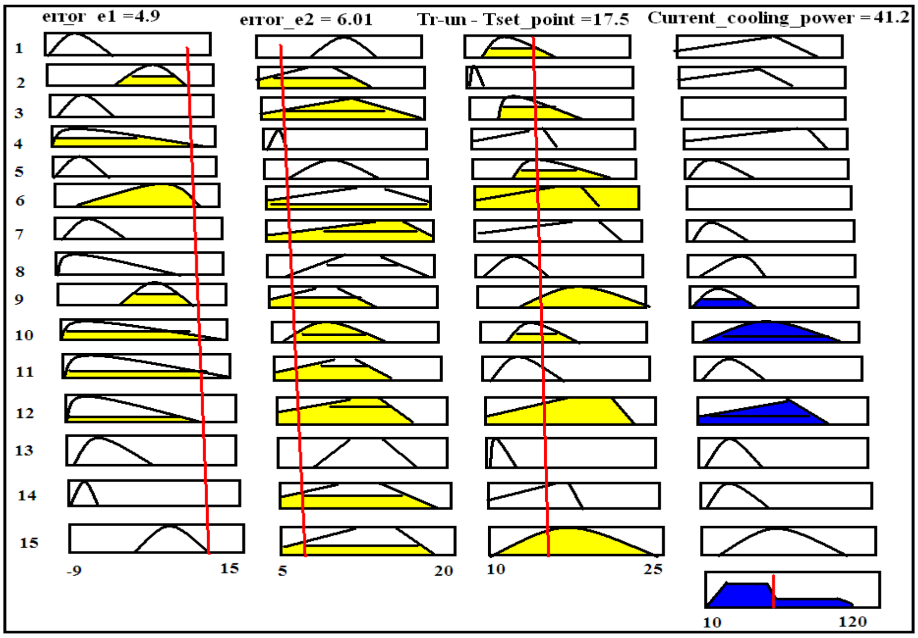

Fig.13: Fuzzy controller2 for optimal operation of cooling machines.

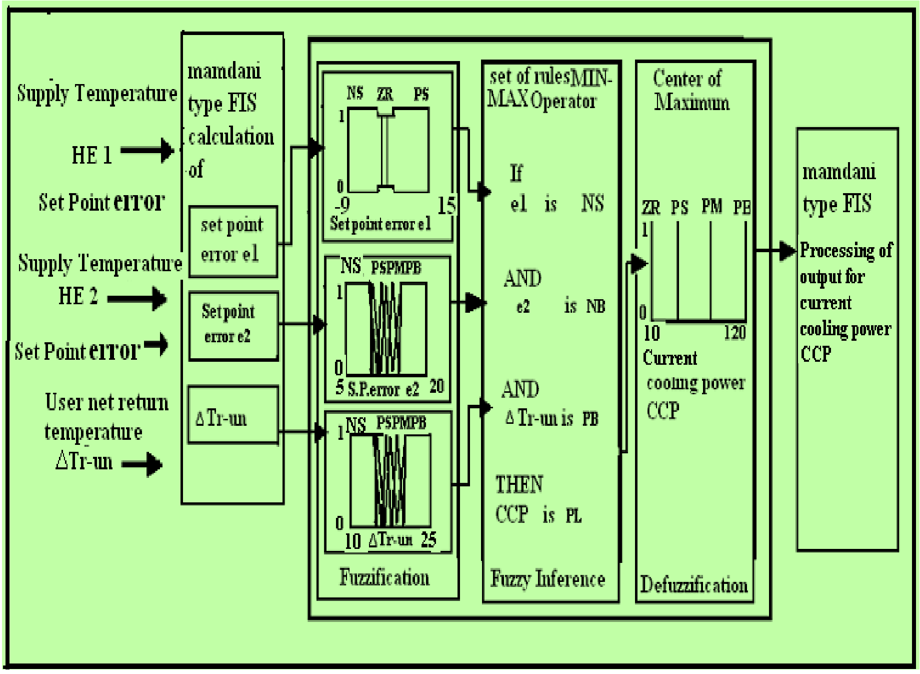

Fig.14: Rule view er for fuzzy controller.

V. Conclusion

From the above elucidation, the process of controlling using fuzzy PI Controller can be clearly understood, as the basic process of fuzzy controlby using variables which come across in HVAC System operation is meticulously depicted.

The different types of fuzzies and its operations are explained in the above paragraphs with its applications. These applications are very helpful to know the importance of fuzzy. The variations of the controlling processes are explained with the help of graphs.

REFERENCES

[1] T. Takagi and M. Sugeno, "Fuzzy identification of systems and its applications to modeling and control," IEEE Trans. Syst., Man, Cybern. vol. 15, 1985.

[2] W. Pedrycz, "An identification algorithm in fuzzy relational systems," Fuzzy Sets Syst., vol. 13, pp. 153 – 167, 1984.

[3] W. Pedrycz and J. V. de Oliveira, "Optimization of fuzzy models," IEEE Trans. Syst., Man, Cyber., vol. 26, no.4, Feb.1996.

[4] R. Alcala, J. Casillas, O. Cordon, A. Gonzalez, and F. Herrera, "A genetic rule weighting and selection process for fuzzy control of heating, ventilation and air conditioning systems," Engineering application of Artificial Intelligence 28 (2005) 279 – 296.

[5] Qiang Xiong, Wen-Jian Cai and Ming He, "A practical decentralized PID auto-tuning method for TITO systems under closed –loop control," International Journal of Innovative Computing, Information and Control, vol.2, No.2, April.2006.

[6] Qing-Gao Wang, Chang-Chieh Hang, Yong Zhang and Qiang Bi,"Multivariable Controller Auto-Tuning with its Application in HVAC Systems," Proceedings of the American Control Conference, California, June.1999.

[7] R.K.Mudi and N.R.Pal, "A robust self-tuning scheme for PI and PDtype fuzzy controllers," IEEE trans. on fuzzy sys. vol. 7, no. 1, Feb.1997. [18] Qiang Bi, Wenjian Cai and et al, "Advanced controller auto-tuning and its application in HVAC systems," Control Engineering Practice, 2000.

[8] D. Dirankov, H. Hellendorn and M. Reintrank, "An introduction to Fuzzy Control," New York: Spinger-Verlag, 1993.

[9] K. Ogata, "Modern Control Engineering," Englewood Cliffs, NJ: Prentice-Hall, 1970.

[10] W. Jian and C. Wenjian, "Development of an adaptive neuro-fuzzy method for supply air pressure control in HVAC system," Syst., Man, Cybern., IEEE, 2000.

[11] Z. R. Radakovic, V. M. Milosevic, S. B. Radakovic, "Application of temperature fuzzy controller in an indirect resistance furnace," Applied Energy. 73 (2002) 167-182.

[12] H.R.Benerji, Fuzzy Logic Controllers, in: R. R. Yager, L. A. Zadeh (Eds.), "An introduction to Fuzzy logic application in intelligent systems,00 Kluwer, Boston, MA, 1992.

[13] H. J. Zimmermann, "Fuzzy sets theory and its applications." Kluwer, Nijhoa, Boston, Dordrecht, Lancaster, 1984. Singapore: World Scientific,1993.

[14] Kim J-H, Kim K-C, Chong EKP, "Fuzzy pre compensated PID controllers," IEEE Trans. Con. Syst. Technology, 1994: 2(4).

[15] Cho Hyun-Joon, Cho Kwang-Bo, Wang Bo- Hyeun, "Fuzzy-PID hybrid control: automatic rule generation using genetic algorithm," Fuzzy sets and systems, 1997, 92(3), 305-316.

[16] Wu Zhi Qiao, Masaharu Mizumoto, Fuzzy sets and systems 78 (1996), 23-35.

[17] M. Sugeno, "Industrial applications of Fuzzy Control,"Amsterdam, Netherlands: Elsevier,1985.

[18] M. Sugeno and K. Tanaka, "Successive identification of a fuzzy model and its application to predi- ction of a complex system," Fuzzy Sets Syst., vol. 42, pp. 315 – 334, 1991.

[19] M. Sugeno and T. Yasukawa, " A fuzzy–logic- based approach to qualitative modeling," IEEE Trans. Fuzzy Syst., vol. 1, pp. 7 – 31, Feb.1993.

[20] R. M. Tong, "The construction and evaluation of fuzzy models," in advances in Fuzzy Set Theory and applications ed. M. M. Gupta et. al., North Holland, 1979.

[21] R. Palm, "Sliding mode fuzzy control", in Proc. Fuzz IEEE, San Diego, CA, 1992, pp. 519-526.